Pressure Regulator
Type 4182-3 - CombiPressure-Regulator

Cryogenic-Pressure Regulator, stainless steel, PN50

Set point range from 2.0 up to 38.0 bar
Connections: male thread for union connection, BSPP (G) or M thread
Cleaning Standard: "cleaned and degreased for oxygen service"
complete with installed strainer screens - mesh size 0.25 mm - on connection A and B

Part No. 4182.X.3100* Set point range 2.0 up to 10.0 bar
set at 8.0 bar unless otherwise noted on purchase order

Part No. 4182.X.3200* Set point range 8.0 up to 22.0 bar
set at 12.0 bar unless otherwise noted on purchase order

Part No. 4182.X.3300* Set point range 20.0 up to 38.0 bar
set at 20.0 bar unless otherwise noted on purchase order

*connection C: 1 = M thread (cone connection 37°), 2 = BSPP (G) thread (cone connection 60°)

Available options - on request only:
· Further connections
· With check unit type 66044

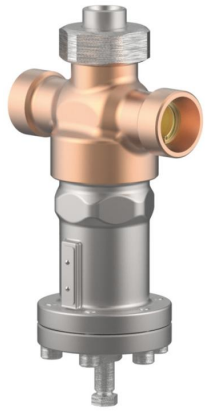

Applications:
Approved for air gases, vapours and cryogenic liquefied gases incl. LNG.
Working temperature: -196°C / -321°F (77K) up to +65°C / 149°F (338K)
Ambient temperature: -40°C / -40°F (233K) up to +65°C / 149°F (338K)

Materials		DIN EN	ASTM
1	Body	CC491K	C83600
2	Bonnet (cover)	1.4408	CF8M
3	Bellow	1.4571	316Ti
4	Spring plate	1.4571	316Ti
5	Lift stopper	1.4571	316Ti
6	Lift stopper	1.4571	316Ti
7	Spring	1.4310	313
8	Spring clamp	1.4301	304
9	Locking nut	1.4301	304
10	Set point adjuster	1.4301	304
11	Strainer (option)	CW452K	C51900
12	Valve seal	PTFE	
13	Bellow disc	CW614N	C38500
14	Bellow	1.4571	316Ti
15	Bellow spring	1.4571	316Ti
16	Connection fitting	CC493K	C93200
17	Tubular overflow	CW614N	C38500
18	Union nut	1.4301	304
19	Flange cover	1.4308	CF8

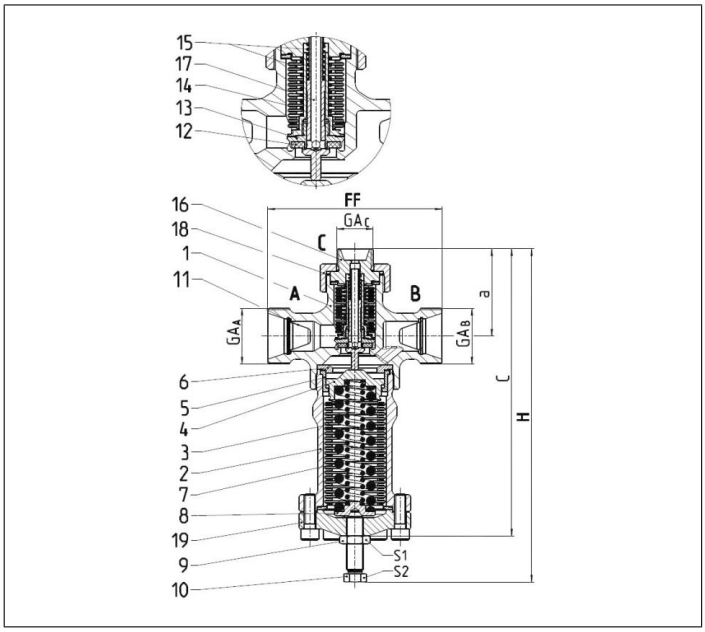

Type 4182	Technical data		
Nominal size	**DN**	**20**	**20**
Dimension code	.X.	MM04020	MG12000
Face-to-face dimension	FF	125	125
Height	H	239	239
Thread	GA_A	M40x2.0	G 1-1/4
Thread	GA_B	M40x2.0	G 1-1/4
Thread	GA_C	M26x1.5	G 3/4
Length	a	63	63
Length	c	206	206
Wrench size across flats	S_1	19	19
Wrench size across flats	S_2	14	14
Weight	ca. kg	3.5	3.5
Kvs-Value	m^3/h	3.2	3.2
Cv-Value	gal/min	3.7	3.7

Dimensions in mm.

Essential: Please confirm pressure range and valve set pressure on purchase order